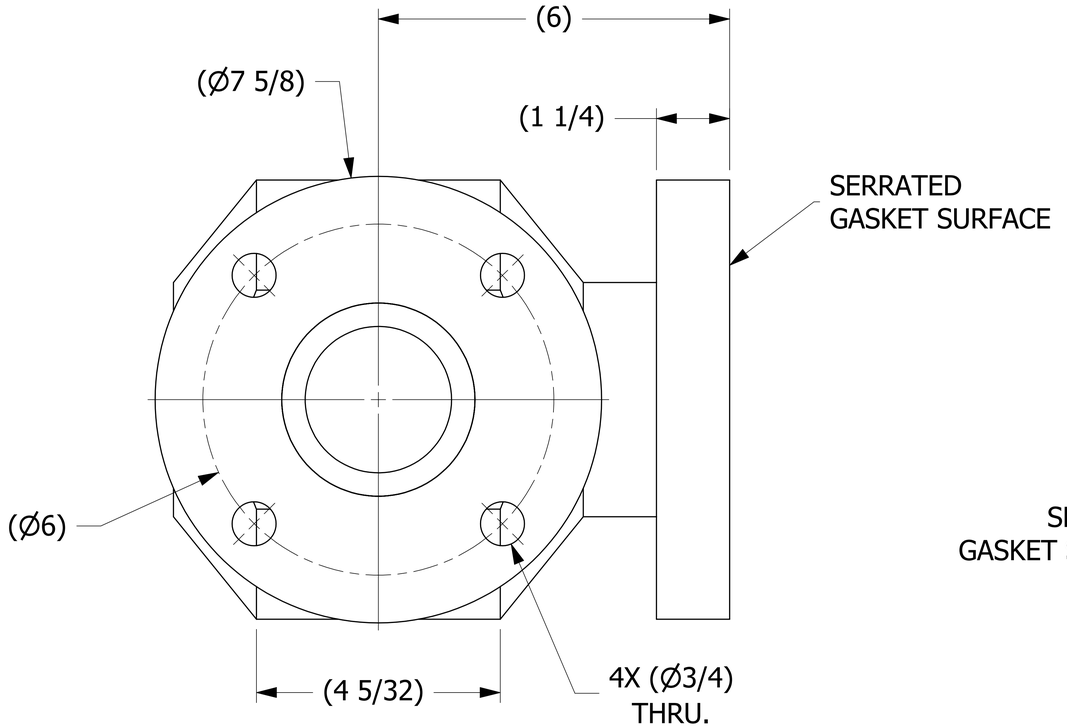

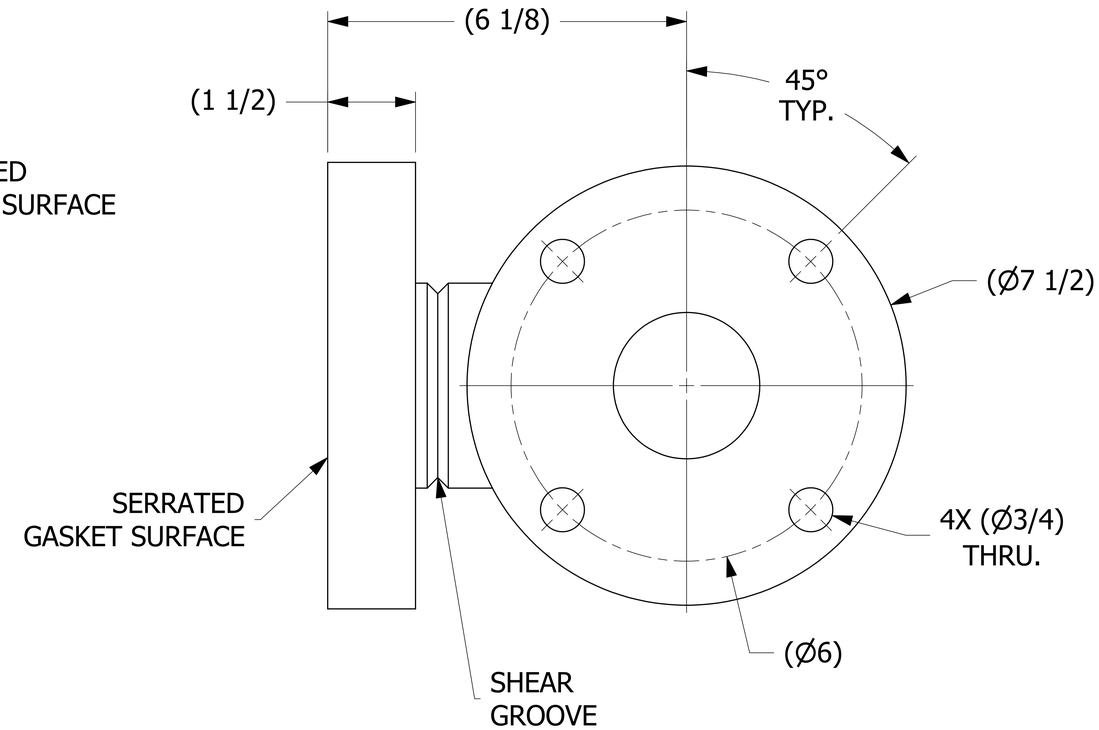

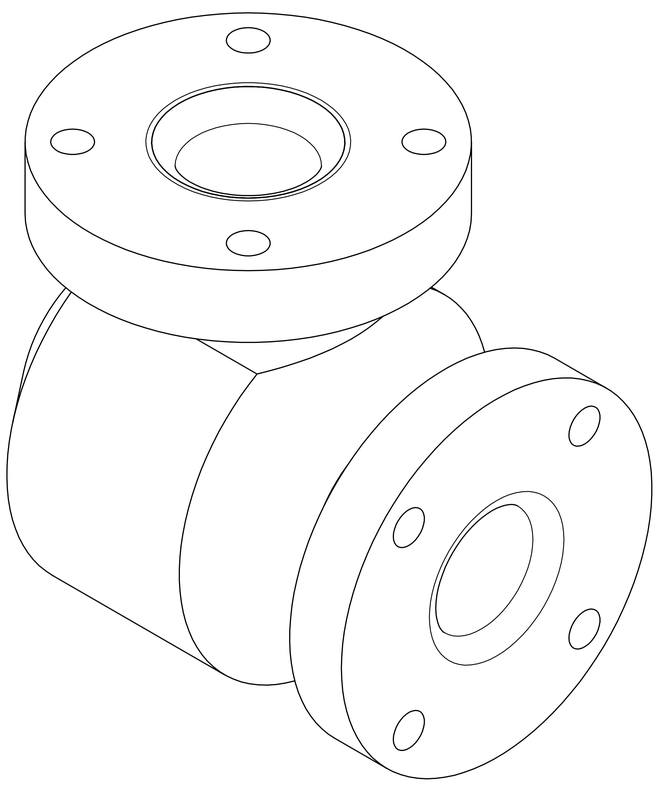

ISOMETRIC VIEW

NOTE:
SOLD TO WORLEY WELDING ONLY.

REV	BY	DATE	DESCRIPTION
E	GS	12-20-12	UPDATED TITLE BLOCK
D	GDS	7-28-11	ADDED MARKING PRESSURE NOTE
C	VD	08-12-10	REPLACED HS758FL W/ HS3FLGS, UPDATED NOTES
B	CHL	1-19-10	REPLACED HS3DTFL W/HS758FL
A	PJG	9-28-09	NEW PART ADDED TO SYSTEM

UNLESS OTHERWISE SPECIFIED DIMENSIONAL TOLERANCES
FRACTIONAL: ±1/16
X.XX: ±.03
X.XXX: ±.015
ANGULAR: ±1°
DEBURR ALL SHARP EDGES.
ALL MACHINED SURFACES TO HAVE A 125 RMS FINISH UNLESS NOTED OTHERWISE.
THIRD ANGLE PROJECTION

DRAWN BY:	CHL
CHECKED BY:	PJG
PROTOTYPE BY:	CHL
PROTOTYPE DATE:	5/19/2009
APPROVED FOR PRODUCTION BY:	PJG
PRODUCTION DATE:	9/28/2009

SALCO PRODUCTS, INC.

PART NAME: ELBOW 3"X90°

MATERIAL: SALCO PE

PROJECT #: 090428 | SHEET #: 1 OF 1 | SCALE: 1:1

DRAWING #: E26840 | PART #: HS3X90PE1

THIS PRINT, PROPERTY OF SALCO PRODUCTS INC, CONTAINS PROPRIETARY INFORMATION AND MUST NOT BE COPIED, REPRODUCED, OR USED DETRIMENTALLY TO OUR INTEREST.

SALES DRAWING SALES DRAWING
SALES DRAWING SALES DRAWING